AC/DC 2-WIRE HIGH TORQUE, STANDARD SENSING RANGE (LONG BODY)

M18		M18		M18	
●	○	●	○	●	○
5.0	8.0	5.0	8.0	5.0	8.0
Nickel plated brass		Nickel plated brass		Nickel plated brass	
●		●		●	

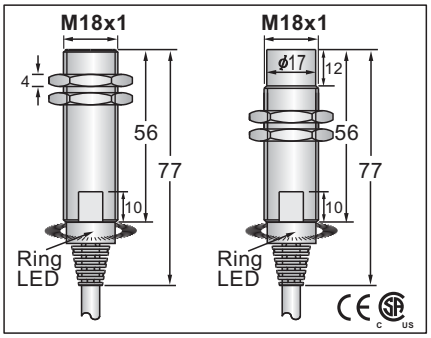

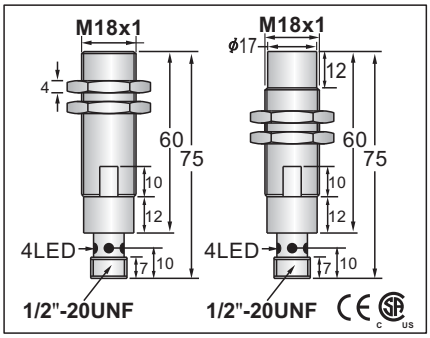

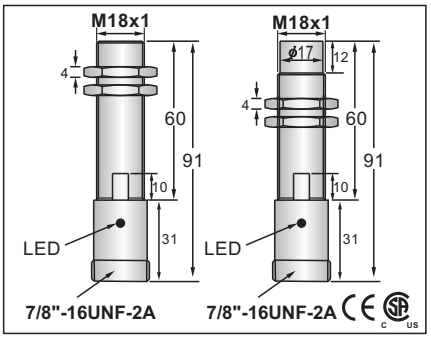

20-250 V AC/DC					
18x18x1 mm	30x30x1 mm				
25 Hz					
1.7mA max.					
5... 300mA max.					
⩽ 15% of sensing distance					
IP67					
Operating:-25°C to 70°C					
Operating: 35% to 95%					
<10%					
NO					
RFI>3V/m / EFT>1KV / ESD>4KV (contact)					
IEC 60947-5-2,Part 7.4.1 / IEC 60947-5-2,Part 7.4.2					
PBT					

AC/DC 2-WIRE HIGH TORQUE, STANDARD SENSING RANGE (LONG BODY)

M30		M30		M30	
●	○	●	○	●	○
10.0	15.0	10.0	15.0	10.0	15.0
Nickel plated brass		Nickel plated brass		Nickel plated brass	
●		●		●	

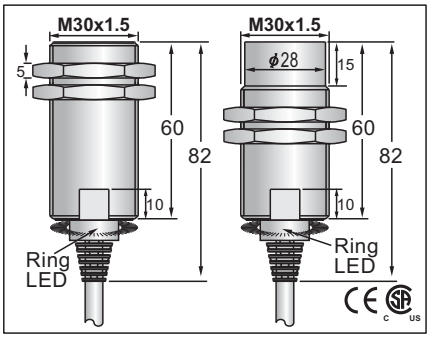

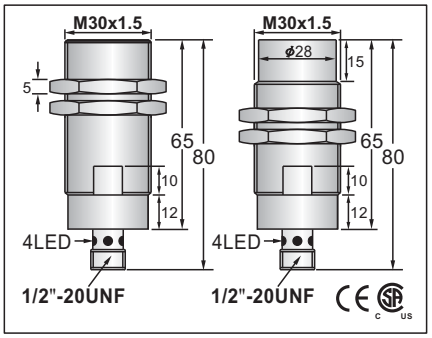

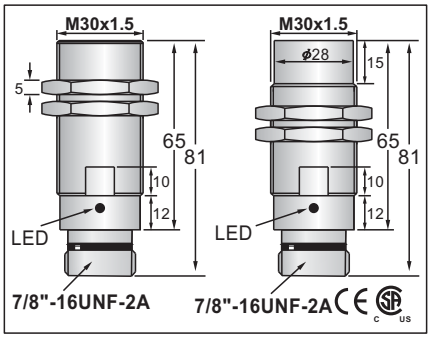

20-250 V AC/DC			20-250 V AC/DC			20-250 V AC/DC		
30x30x1 mm		54x54x1 mm	30x30x1 mm		54x54x1 mm	30x30x1 mm		54x54x1 mm
25 Hz			25 Hz			25 Hz		
1.7mA max.			1.7mA max.			1.7mA max.		
5... 300mA max.			5... 300mA max.			5... 300mA max.		
⩽ 15% of sensing distance			⩽ 15% of sensing distance			⩽ 15% of sensing distance		
IP67			IP67			IP67		
Operating:-25°C to 70°C			Operating:-25°C to 70°C			Operating:-25°C to 70°C		
Operating: 35% to 95%			Operating: 35% to 95%			Operating: 35% to 95%		
<10%			<10%			<10%		
NO			NO			NO		
RFI>3V/m / EFT>1KV / ESD>4KV (contact)			RFI>3V/m / EFT>1KV / ESD>4KV (contact)			RFI>3V/m / EFT>1KV / ESD>4KV (contact)		
IEC 60947-5-2,Part 7.4.1 / IEC 60947-5-2,Part 7.4.2			IEC 60947-5-2,Part 7.4.1 / IEC 60947-5-2,Part 7.4.2			IEC 60947-5-2,Part 7.4.1 / IEC 60947-5-2,Part 7.4.2		
PBT			PBT			PBT		